INTERIORS

Assembly instructions for rotating shoe stand ROYAL

SEVROLL®

Components

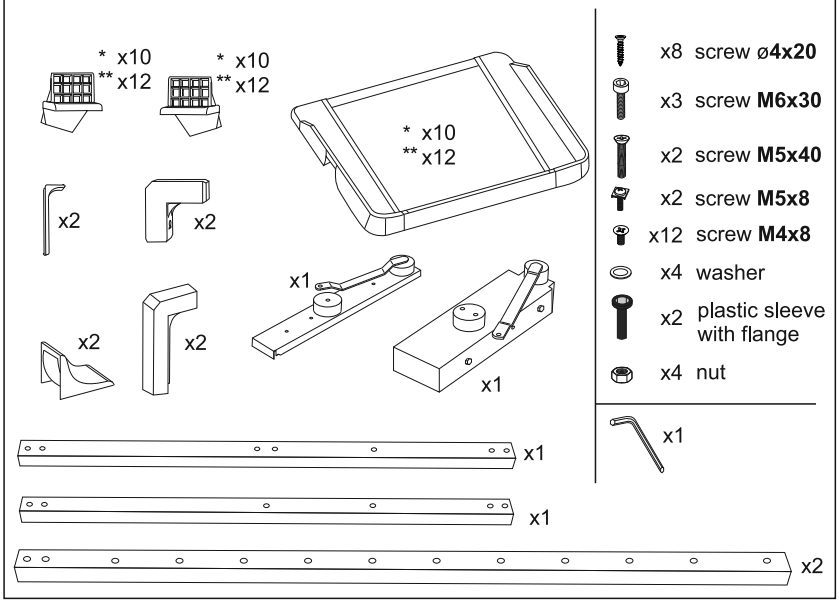

- x8 screw ø**4x20**
- x3 screw **M6x30**
- x2 screw **M5x40**
- x2 screw **M5x8**
- x12 screw **M4x8**
- x4 washer
- x2 plastic sleeve with flange
- x4 nut
- x1

Body dimensions

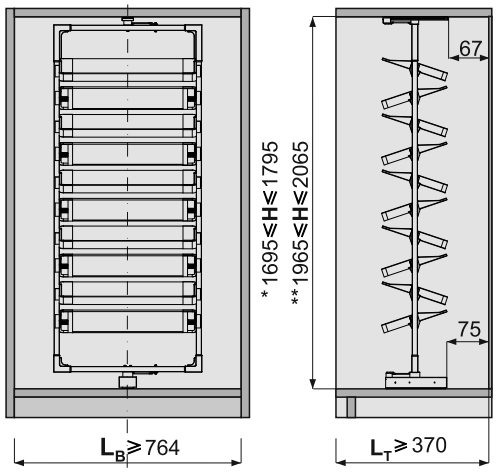

H - internal carcass segment height [mm]
L_T - internal carcass segment depth [mm]
L_B - internal carcass segment width [mm]

* - for a 10 shelf rotating shoe stand / ** - for a 12 shelf rotating shoe stand

1. Installation of slides

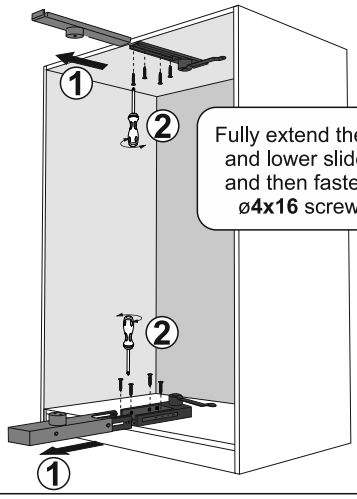

Fully extend the upper and lower slides (**1**), and then fasten with ø**4x16** screws (**2**)

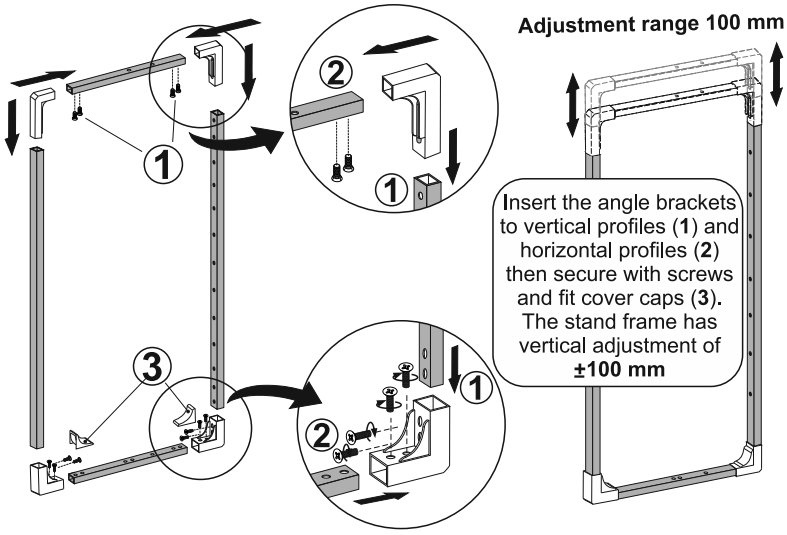

Insert the angle brackets to vertical profiles (**1**) and horizontal profiles (**2**) then secure with screws and fit cover caps (**3**). The stand frame has vertical adjustment of **±100 mm**

2. Installing stand frame on slides

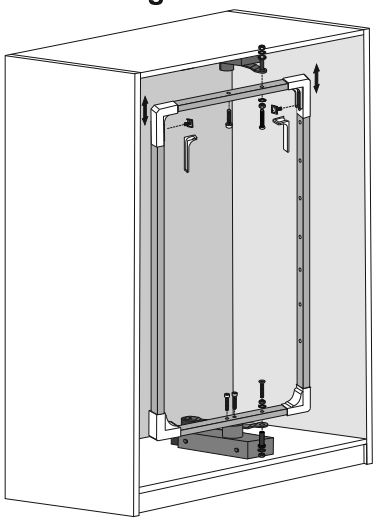

3. Installing the shelves

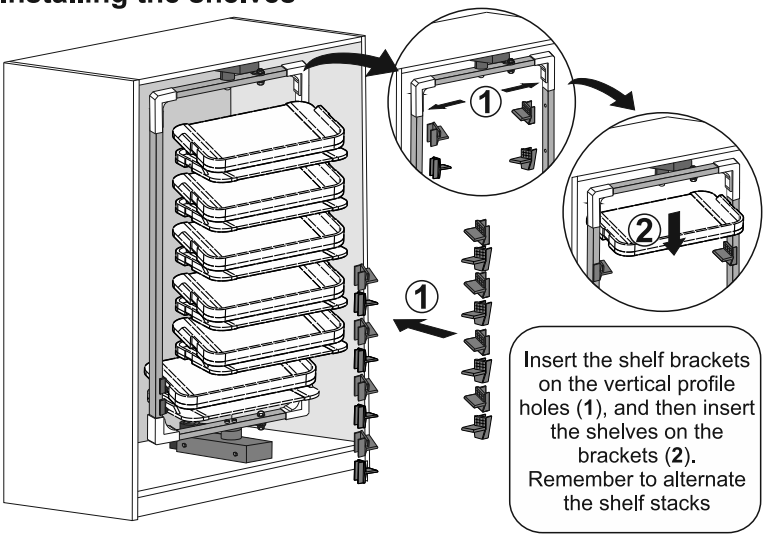

Insert the shelf brackets on the vertical profile holes (**1**), and then insert the shelves on the brackets (**2**). Remember to alternate the shelf stacks

Attention! As the stand moves outwards during operation, **dimension H** should be totally free from any additional components! If the wardrobe is designed with sliding doors, the stand must be mounted on blocks that clear the top and bottom track.